Proportional pressure control valve
Slip-in cartridge construction
- **Direct-operated**
- **Q_{max} = 3 l/min**
- **p_{max} = 450 bar**
- **$p_{T\,max}$ = 20 bar, $p_{N\,red\,max}$ = 48 bar**

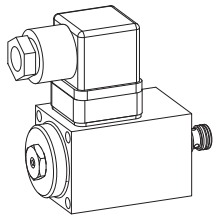

DESCRIPTION
Direct-operated proportional pressure control cartridge for cavity MDPPR11 PI35. Due to the very compact installation dimensions, new application possibilities are offered. As standard versions, two pressure ranges are available. The adjustment is done by means of a Wandfluh proportional solenoid (VDE-Standard 0580). The solenoid as well as the housing bottom made of steel are zinc coated and therefore rust-protected.

FUNCTION
The proportional pressure control valve controls the pressure in the connection A (1). Solenoid power and the pressure in the connection A (1) increase proportionally to the solenoid current. The valve operates to a great extent independent of the pressure in the connection P (2). The increase of the pressure in the connection A (1) to over the set value, e.g. by an active consumer, is prevented by diverting excess oil to the tank T (3). The back pressure in T influences the pressure in A (1). With a current-free solenoid, the oil freely flows from the consumer connection A to the connection T. For driving the valve, Wandfluh proportional amplifiers are available (see Register 1.13).

APPLICATION
The compact valve has its application in hydraulic systems, in which the pressure frequently has to be varied. The facility of electric remote control of the valve, in conjunction with process control systems, makes economical solutions with repetitive sequences possible. Application fields are the pilot-operation of proportional spool valves, the driving of control pumps and motors as well as the controlling of the contact pressure of disc brake coatings. With the compact valve a minimum control oil volume is achieved.

TYPE CODE

M D P PR11 - ☐ - ☐ # ☐

Pressure reducing valve		
Direct operated		
Proportional		
Slip-in cartridge, diameter 11 mm		
Nominal pressure range $p_{N\,red}$	25 bar	25
	48 bar	48
Nominal voltage U_N	12 VDC	G12
	24 VDC	G24
Design-Index (Subject to change)		

GENERAL SPECIFICATIONS

Denomination	Direct operated proportional pressure reducing valve
Construction	Slip-in cartridge for cavity acc. to Wandfluh-standard
Actuation	Proportional solenoid
Mounting	min. 2 head screws crosswise M4 x 60
Ambient temperature	-25…50 °C
Mounting position	any
Fastening torque	M_D = 2,8 Nm (quality 8.8)
Weight	m = 0,45 kg

ELECTRICAL SPECIFICATIONS

Construction	Proportional solenoid, wet pin push type, pressure tight	
Standard nominal voltage	U = 12 VDC	U = 24 VDC
Limiting current	I_G = 1250 mA	I_G = 680 mA
Relative duty factor	100 % ED / DF	
Protection class	IP 65 acc. to EN 60529	
Connection / Power supply	Over device plug connection to EN 175301-803 (DIN 43650) ISO 4400	

HYDRAULIC SPECIFICATIONS

Fluid	Mineral oil, other fluid on request
Contamination efficiency	ISO 4406:1999, class 18/16/13 Required filtration grade (ß6...10 ≥ 75) (refer to data sheet 1.0-50/2)
Oil temperature	Acrylnitril -25…+70 °C
Viscosity range	12 mm²/s...320 mm²/s
Maximum pressure	p_{max} = 450 bar (final testing at WAG up to 350 bar)
Nominal pressure range	$p_{N\,red}$ = 25 bar, $p_{N\,red}$ = 48 bar
Volume flow range	25 bar Q = 0 - 1 l/min p → A A → T 48 bar Q = 0 - 3 l/min
Pressure decrease 1 → 3	$\Delta p_{red\,min.}$ < lower than nominal pressure at nominal volume flow
Leakage volume flow	see characteristics
Hysteresis	≤ 4 % (at optimal dither signal)

SYMBOL

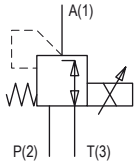

CHARACTERISTICS Oil viscosity ν = 30 mm²/s

$p_{red} = f(Q)$ Pressure volume flow characteristics (Maximal adjustable pressure)

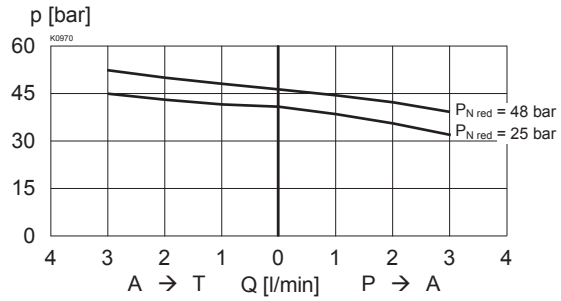

$p_{red} = f(Q)$ Pressure volume flow characteristics (Minimal adjustable pressure)

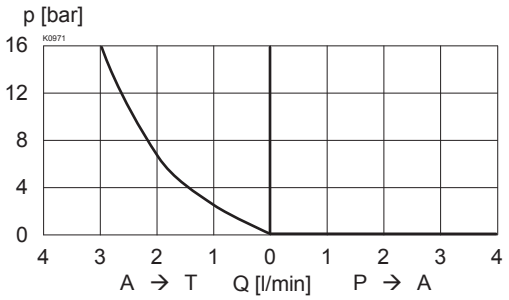

$p_{red} = f(I)$ Pressure adjustment characteristics [at Q = 0 l/min] / (static)

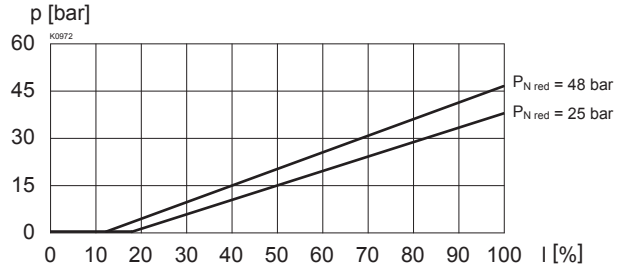

$Q_{st+L} = f(p_{red})$ Pilot- and leakage volume flow characteristice [P (2) → T (3)]

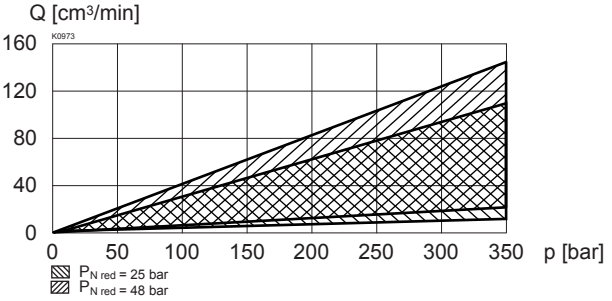

DIMENSIONS / SECTIONAL DRAWINGS

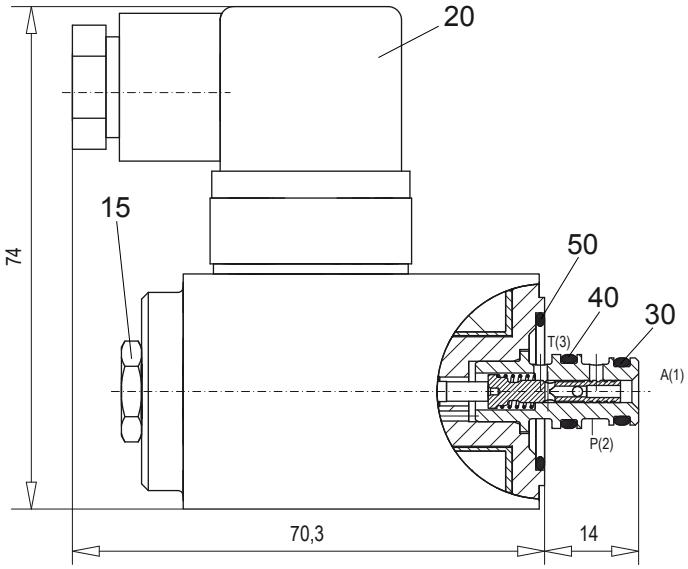

PARTS LIST

Position	Article	Description
15	253.8000	Mounted screw with integrated manual override HB 4,5
20	219.2002	Plug (black)
30	160.0060	O-ring ID 6,07 x 1,78
40	160.0071	O-ring ID 7,65 x 1,78
50	160.2204	O-ring ID 20,35 x 1,78

Cavity drawing acc. to Wandfluh standard

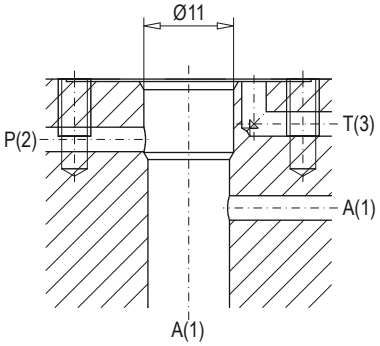

For detailed cavity drawing see data sheet 2.13-1044

ACCESSORIES

Proportional amplifier register 1.13

Technical explanation see data sheet 1.0-100