Proportional pressure reducing cartridge

- direct operated by means of pilot spool
- Q_{max} = 20 l/min
- p_{max} = 350 bar
- $p_{N\ red\ max}$ = 200 bar

7/8"-14 UNF
Wandfluh standard

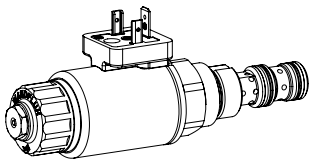

DESCRIPTION

Direct operated proportional pressure reducing valve with pilot spool actuation in screw-in cartridge construction for cavity according Wandfluh standard. The proportional pressure reducing valve controls the pressure in port A (1). Proportionally to the solenoid current, the solenoid force and the pressure in port A (1) rise. The valve functions practically independently of the pressure in port P (2). Pressure increase in the consumer port A (1) to above the adjusted value, e.g. through an active consumer, is avoided by discharging excess oil to the tank T (3). With the solenoid deenergised, the oil flows freely from consumer port A (1) to port T (3). For the control, Wandfluh proportional amplifiers are available (see register 1.13).

APPLICATION

These valves are used in hydraulic systems where the pressure has to be changed frequently. The electrical remote control in conjunction with process controls allows economical solutions with repeatable processes. Direct operated pressure reducing valves are used where a low minimal adjustable pressure is required. For machining the cartridge cavity in steel and aluminum blocks, cavity tools are available for purchase. Please refer to the data sheets in register 2.13.

SYMBOL

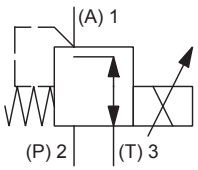

ACTUATION

Actuation	Proportional solenoid, wet pin push type, pressure tight
Execution	W.S37 / 19 x 50 (data sheet 1.1-173) M.S35 / 19 x 50 (data sheet 1.1-174)
Connection	Connector socket DIN EN 175301 – 803 Connector Deutsch DT04 – 2P Connector socket AMP Junior-Timer axial Connector socket AMP Junior-Timer radial

STANDARDS

Cartridge cavity	Wandfluh standard
Solenoids	DIN VDE 0580
Connection execution D	DIN EN 175301 – 803
Protection class	EN 60 529
Contamination efficiency	ISO 4406

INSTALLATION NOTES

Mounting type	Screw-in cartridge ⅞"-14 UNF
Mounting position	Any, preferably horizontal
Tightening torque	M_D = 60 Nm Screw-in cartridge M_D = 5 Nm knurled nut M_D = 9,5 Nm HB0 M_D = 5,5 Nm HB4,5

TYPE CODE

M P P PU10 - [ ] - [ ] / [ ] [ ] - [ ] [ ] # [ ]

Pressure reducing valve					
Direct operated by means of pilot spool					
Proportional					
Screw-in cartridge 7/8“ - 14 UNF					
Nominal pressure range $p_{N\,red}$	20 bar	20	115 bar	115	
	80 bar	80	200 bar	200	
Nominal voltage U_N	12 VDC	G12			
	24 VDC	G24			
	without coil	X5			
Slip-on coil	Metal housing round			W	
	Metal housing square			M	
Connection execution	Connector socket EN 175301 - 803 / ISO 4400			D	
	Connector socket AMP Junior - Timer			J	
	Connector Deutsch DT04 - 2P			G	
Sealing material	NBR				
	FKM (Viton)	D1			
Manual override	Manual override			HB4,5	
	Screw plug			HB0	
Design index (subject to change)					

2.3-673

GENERAL SPECIFICATIONS

Designation	Proportional pressure reducing valve
Construction	Direct operated by means of pilot spool
Mounting	Screw-in cartridge construction
Nominal size	7/8"-14 UNF
Actuation	Proportional solenoid
Ambient temperature	-25…+70 °C
Weight	0,55 kg
MTTFd	150 years

HYDRAULIC SPECIFICATIONS

Working pressure	p_{max} = 350 bar
Nominal pressure range	$P_{N\,red}$ = 20, 80, 115, 200 bar
Minimum adjustable pressure	< 1 bar
Volume flow range	See characteristic
Hysteresis	≤ 4 % at optimal dither signal
Repeatability	≤ 1 % at optimal dither signal
Fluid	Mineral oil, other fluid on request
Viscosity range	12 mm²/s…320 mm²/s
Temperature range fluid	-25…+70 °C (NBR) -20…+70 °C (FKM)
Contamination efficiency	Class 18 / 16 / 13
Filtration	Required filtration grade ß 6…10 ≥ 75, see data sheet 1.0-50

ELECTRICAL SPECIFICATIONS

Protection class	Connection execution D: IP65 Connection execution G: IP67 and IP69K Connection execution I/ J: IP66
Relative duty factor	100 % DF
Standard nominal voltage	12 VDC, 24 VDC
Limiting current at 50 °C	I_G = 1360 mA (U_N = 12VDC) I_G = 680 mA (U_N = 24VDC)

Note! Other electrical specifications see data sheet 1.1-173 (slip-on coil W) and 1.1-174 (slip-on coil M)

PERFORMANCE SPECIFICATIONS

Oil viscosity υ = 30 mm²/s

p =f (Q) **Pressure volume flow characteristic**
Maximal adjustable pressure

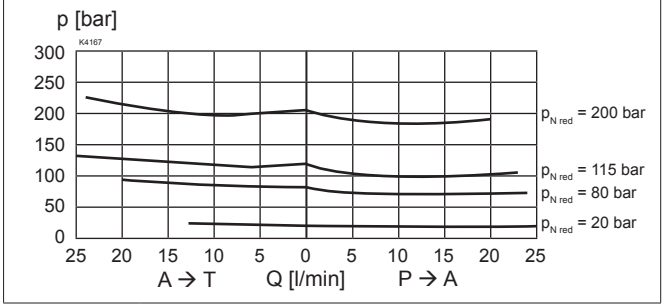

p =f (Q) **Pressure volume flow characteristic**
Minimal adjustable pressure

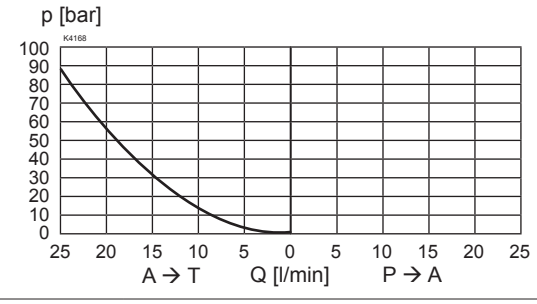

p =f (I) **Pressure adjustment characteristics**
Up to I_G = 40 % slightly increased hysteresis

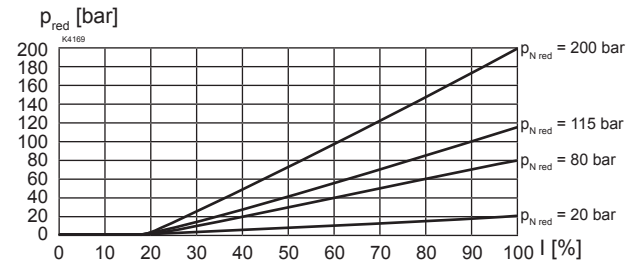

Q_L = f (p) **Leakage volume flow characteristic per nominal pressure range**
A(1)->T(3) bei I_G

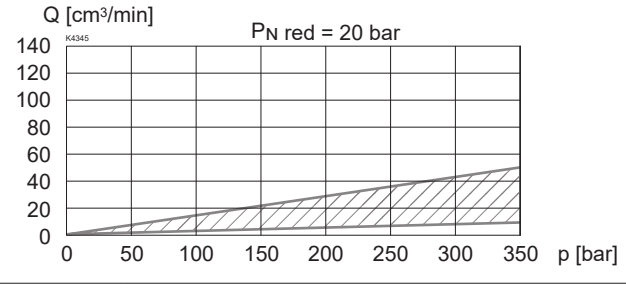

Q_L = f (p) **Leakage volume flow characteristic per nominal pressure range**
A(1)->T(3) bei I_G

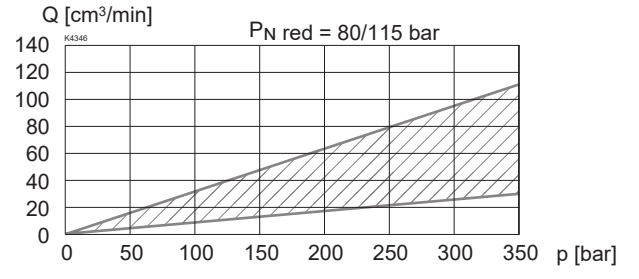

Q_L = f (p) **Leakage volume flow characteristic per nominal pressure range**
A(1)->T(3) bei I_G

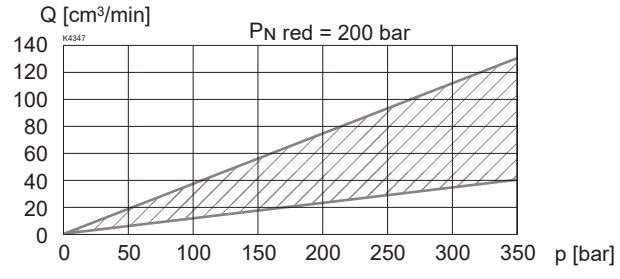

ACCESSORIES

Proportional amplifier	Register 1.13
Electric plug B (black)	Article no. 219.2002
Technical explanations	Data sheet 1.0-100
Filtration	Data sheet 1.0-50

MANUAL OVERRIDE

Standard: HB4,5

Optionally: Screw plug (HBO), no actuation possible.

Attention! If the manual override is actuated, the nominal pressure level may be exceeded.

SURFACE TREATMENT

- The cartridge body, the slip-on coil and the armature tube are zinc-nickel coated

SEALING MATERIAL

NBR or FKM (Viton) as standard, choice in the type code

DIMENSIONS

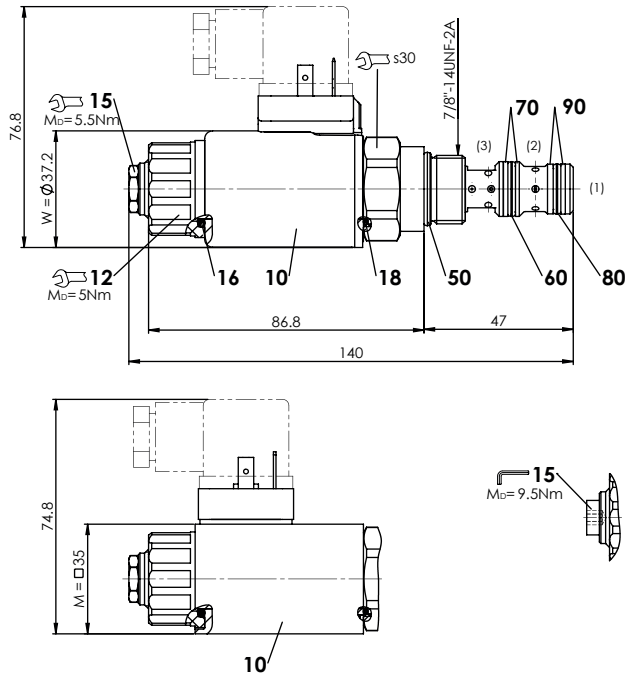

HYDRAULIC CONNECTION

Cavity drawing according to Wandfluh standard

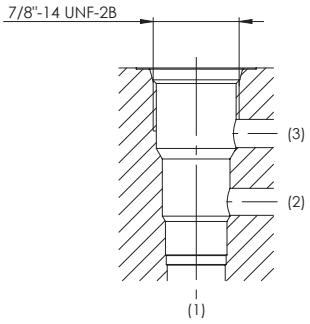

Attention! For detailed cavity drawing and cavity tools see data sheet 2.13-1045

PARTS LIST

Position	Article	Description
10	206.2… 260.5…	W.S37 / 19 x 50 M.S35 / 19 x 50
	154.2700	Knurled nut
	253.8000 239.2033	HB4,5 manual override HB0 Screw plug
	251.3113	Seal kit MV.PU10
		Seal kit consisting of:
16		O-ring ID 18,72 x 2,62
18		O-ring ID 17,17 x 1,78
50		O-ring ID 18,77 x 1,78
60		O-ring ID 14,00 x 1,78
70		Back-up ring rd 14,6 x 17,5 x 1,4
80		O-ring ID 12,42 x 1,78
90		Backup ring rd 13,1 x 16 x 1,4