Proportional pressure reducing cartridge

- pilot operated
- Q_{max} = 60 l/min
- p_{max} = 400 bar
- $p_{N\ red\ max}$ = 350 bar

7/8"-14 UNF
Wandfluh standard

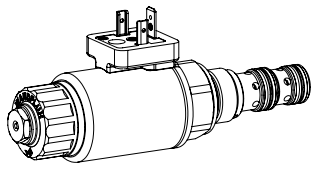

DESCRIPTION

Pilot operated proportional pressure reducing valve in screw-in cartridge construction for cavity according to Wandfluh standard. Proportionally to the solenoid current, the solenoid force and the pressure in port A (1) rise. The valve functions practically independently of the pressure in port P (2). Pressure increase in the consumer port A (1) to above the adjusted value, e.g. through an active consumer, is avoided by discharging excess oil to the tank T (3). With the solenoid deenergised, the oil flows freely from port P (2) to consumer port A (1). For the control, Wandfluh proportional amplifiers are available (see register 1.13).

APPLICATION

The electrical remote control in conjunction with process controls allows economical solutions with repeatable processes. The screw-in cartridge is perfectly suitable for installation in control blocks. Please refer to the data sheets in register 2.13.

SYMBOL

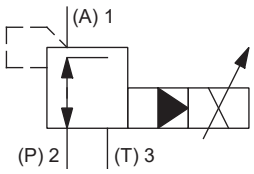

ACTUATION

Actuation	Proportional solenoid, wet pin push type, pressure tight
Execution	W.S37 / 19 x 50 (data sheet 1.1-173) M.S35 / 19 x 50 (data sheet 1.1-174)
Connection	Connector socket DIN EN 175301 – 803 Connector Deutsch DT04 – 2P Connector socket AMP Junior-Timer axial Connector socket AMP Junior-Timer radial

STANDARDS

Cartridge cavity	Wandfluh standard
Solenoids	DIN VDE 0580
Connection execution D	DIN EN 175301 – 803
Protection class	EN 60 529
Contamination efficiency	ISO 4406

INSTALLATION NOTES

Mounting type	Screw-in cartridge 7/8"-14 UNF
Mounting position	Any, preferably horizontal
Tightening torque	M_D = 60 Nm Screw-in cartridge M_D = 5 Nm knurled nut M_D = 9,5 Nm HB0 M_D = 5,5 Nm HB4,5

TYPE CODE

M V P PU10 - [ ] - [ ] / [ ] [ ] - [ ] [ ] # [ ]

Pressure reducing valve				
Pilot operated				
Proportional				
Screw-in cartridge 7/8“ - 14 UNF				
Nominal pressure range $p_{N\,red}$	20 bar	20	200 bar	200
	63 bar	63	275 bar	275
	100 bar	100	350 bar	350
	160 bar	160		
Nominal voltage U_N	12 VDC	G12		
	24 VDC	G24		
	without coil	X5		
Slip-on coil	Metal housing round			W
	Metal housing square			M
Connection execution	Connector socket EN 175301 - 803 / ISO 4400			D
	Connector socket AMP Junior - Timer			J
	Connector Deutsch DT04 - 2P			G
Sealing material	NBR			
	FKM (Viton)	D1		
Manual override	Manual override			HB4,5
	Screw plug			HB0
Design index (subject to change)				

2.3-672

GENERAL SPECIFICATIONS

Designation	Proportional pressure reducing valve
Construction	Pilot operated
Mounting	Screw-in cartridge construction
Nominal size	7/8"-14 UNF
Actuation	Proportional solenoid
Ambient temperature	-25…+70 °C
Weight	0,53 kg
MTTFd	150 years

ELECTRICAL SPECIFICATIONS

Protection class	Connection execution D: IP65 Connection execution G: IP67 and IP69K Connection execution I/ J: IP66
Relative duty factor	100 % DF
Standard nominal voltage	12 VDC, 24 VDC
Limiting current at 50 °C	I_G = 1320 mA (U_N = 12VDC) I_G = 660 mA (U_N = 24VDC)

Note! Other electrical specifications see data sheet 1.1-173 (slip-on coil W) and 1.1-174 (slip-on coil M)

HYDRAULIC SPECIFICATIONS

Working pressure	p_{max} = 400 bar
Nominal pressure range	$P_{N\,red}$ = 20; 63; 100; 160; 200; 275; 350 bar
Volume flow range	Q = 0…60 l/min
Leakage oil	See characteristics
Hysteresis	≤ 4 % at optimal dither signal
Repeatability	≤ 2 % at optimal dither signal
Fluid	Mineral oil, other fluid on request
Viscosity range	12 mm²/s…320 mm²/s
Temperature range fluid	-25…+70 °C (NBR) -20…+70 °C (FKM)
Contamination efficiency	Class 18 / 16 / 13
Filtration	Required filtration grade ß 6…10 ≥ 75, see data sheet 1.0-50

PERFORMANCE SPECIFICATIONS

Oil viscosity υ = 30 mm²/s

$p_{red} = f(Q)$ **Pressure volume flow characteristics**
Maximal adjustable pressure

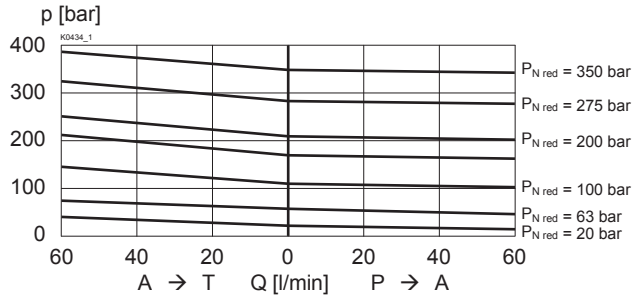

$p_{red} = f(Q)$ **Pressure volume flow characteristics**
Minimal adjustable pressure
*Consumer resistance depending on the system

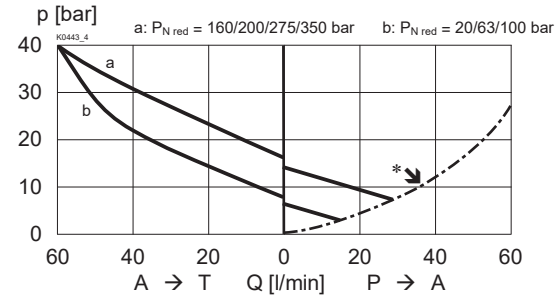

$p_{red} = f(n)$ **Pressure adjustment characteristics**
Measured at Q = 0 l/min (static)

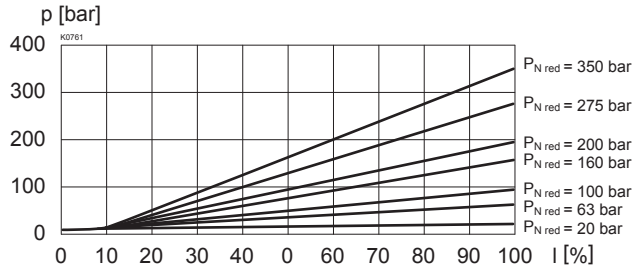

$Q_L = f(p)$ **Leakage volume flow characteristic**
A (1) → T (3) (pressure in P (2) = 350 bar)

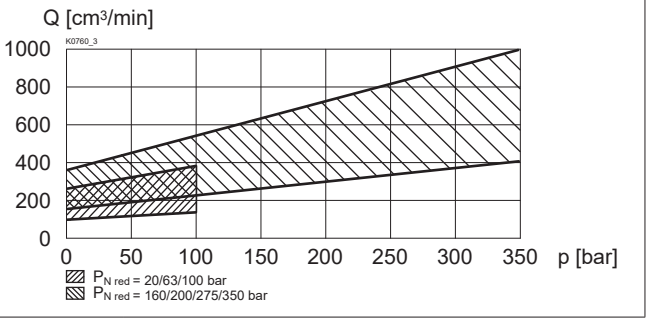

ACCESSORIES

Proportional amplifier	Register 1.13
Electric plug B (black)	Article no. 219.2002
Technical explanations	Data sheet 1.0-100
Filtration	Data sheet 1.0-50

MANUAL OVERRIDE

Standard: HB4,5
Optionally: Screw plug (HBO), no actuation possible.

Attention! If the manual override is actuated, the nominal pressure level may be exceeded.

SURFACE TREATMENT

- The cartridge body, the slip-on coil and the armature tube are zinc-nickel coated

SEALING MATERIAL

NBR or FKM (Viton) as standard, choice in the type code

DIMENSIONS

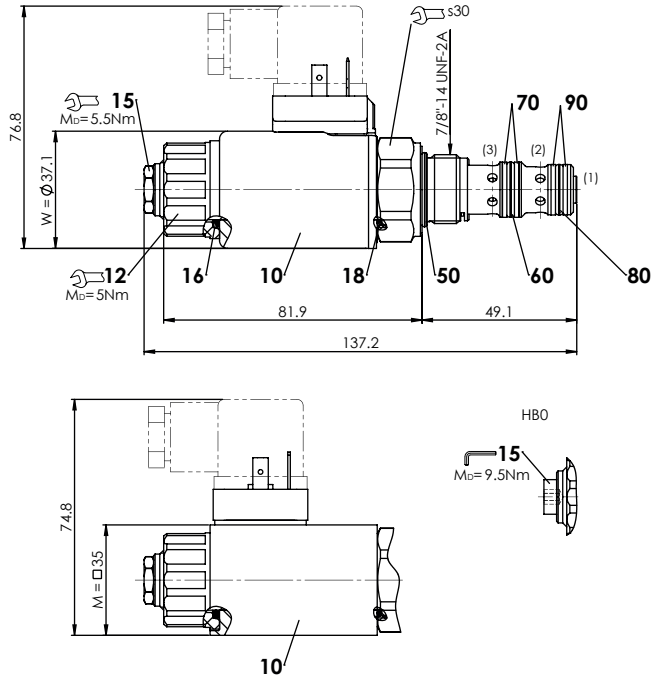

HYDRAULIC CONNECTION

Cavity drawing according to Wandfluh standard

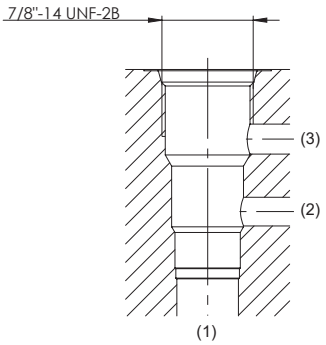

Attention! For detailed cavity drawing and cavity tools see data sheet 2.13-1045

PARTS LIST

Position	Article	Description
10	206.2…	W.S37 / 19 x 50
	260.5…	M.S35 / 19 x 50
12	154.2700	Knurled nut
15	253.8000	HB4,5 manual override
	239.2033	HB0 Screw plug
	251.3113	Seal kit MV.PU10

Seal kit consisting of:

16	O-ring	ID 18,72 x 2,62
18	O-ring	ID 17,17 x 1,78
50	O-ring	ID 18,77 x 1,78
60	O-ring	ID 14,00 x 1,78
70	Back. ring	PTFE rd 14,6 x 17,5 x 1,4
80	O-ring	ID 12,42 x 1,78
90	Back. ring	PTFE rd 13,1 x 16 x 1,4