Proportional 2-way flow control cartridge

- direct operated
- Q_{max} = 25 l/min
- $Q_{N\,max}$ = 25 l/min
- p_{max} = 350 bar

M22 x 1,5
ISO 7789

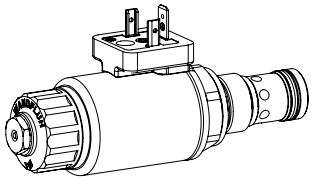

DESCRIPTION

Direct operated, pressure compensated proportional flow control valve in screw-in cartridge construction for cavity according to ISO 7789. With the solenoid deenergised, the control spool is held in the closed position (QN) or open position (QO) by a spring. The change of the electric current is followed by a proportional volume flow change. From the input (1), the fluid flows over a throttle and a control spool to the controlled output (2). For the control, Wandfluh proportional amplifiers are available (see register 1.13).

APPLICATION

Proportional flow control valves are suitable for precise speed control, where the load current has to be maintained constant independent of the input and output pressure. The screw-in cartridge is perfectly suitable for installation in control blocks and is installed in sandwich- (vertical stacked systems) and in flange plates (corresponding data sheets in this register). For machining the cartridge cavity in steel and aluminum blocks, cavity tools are available for purchase. Please refer to the data sheets in register 2.13.

SYMBOL

Simplified

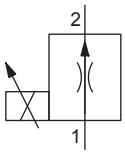

Detailed QN…

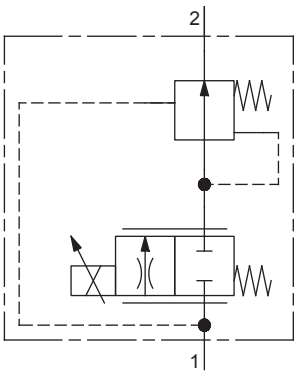

Detailed QO…

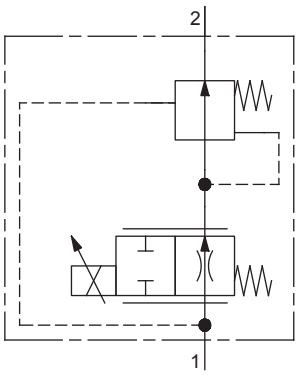

GENERAL SPECIFICATIONS

Designation	Proportional 2-way flow control valve
Construction	Direct operated
Mounting	Screw-in cartridge construction
Nominal size	M22 x 1,5 according to ISO 7789
Actuation	Proportional solenoid
Ambient temperature	-25…+70 °C
Weight	0,64 kg
MTTFd	150 years

ELECTRICAL SPECIFICATIONS

Protection class	Connection execution D: IP65 Connection execution G: IP67 and IP69K Connection execution I/ J: IP66
Relative duty factor	100 % DF
Standard nominal voltage	12 VDC, 24 VDC
Limiting current at 50 °C	I_G = 1360 mA (U_N = 12VDC) I_G = 680 mA (U_N = 24VDC)

Note! Other electrical specifications see data sheet 1.1-173 (slip-on coil W) and 1.1-174 (slip-on coil M)

TYPE CODE

Q ☐ P PM22 - ☐ - ☐ / ☐ ☐ - ☐ ☐ # ☐

Flow control valve				
Normally closed		N		
Normally open		O		
Proportional				
Screw-in cartridge M22 x 1,5				
Nominal volume flow rate Q_N	normally closed		normally open	
	3,2 l/min	3,2	3,2 l/min	3,2
	8 l/min	8		
	16 l/min	16		
	25 l/min	25		
Nominal voltage U_N	12 VDC	G12		
	24 VDC	G24		
	without coil	X5		
Slip-on coil	Metal housing round		W	
	Metal housing square		M	
Connection execution	Connector socket EN 175301-803 / ISO 4400		D	
	Connector socket AMP Junior-Timer		J	
	Connector Deutsch DT04-2P		G	
Sealing material	NBR			
	FKM (Viton)	D1		
Manual override		HB4,5		
		HB0		
Design index (subject to change)				

2.6-631

ACTUATION

Actuation	Proportional solenoid, wet pin push type, pressure tight
Execution	W.S37 / 19 x 50 (data sheet 1.1-173) M.S35 / 19 x 50 (data sheet 1.1-174)
Connection	Connector socket DIN EN 175301 – 803 Connector Deutsch DT04 – 2P Connector socket AMP Junior-Timer axial Connector socket AMP Junior-Timer radial

HYDRAULIC SPECIFICATIONS

Working pressure	p_{max} = 350 bar
Maximum volume flow	Q_{max} = 25 l/min
Minimum volume flow	Q_{min} = 0,1 l/min
Volume flow direction	1 → 2
Leakage oil	See characteristics
Nominal volume flow range	Q_N = 3,2; 8; 16; 25 l/min (QN) Q_N = 3,2 l/min (QO)
Hysteresis	≤ 6 % (QN); 10 % (QO) at optimal dither signal
Repeatability	≤ 2 % at optimal dither signal
Fluid	Mineral oil, other fluid on request
Viscosity range	12 mm²/s…320 mm²/s
Temperature range fluid	-25…+70 °C (NBR) -20…+70 °C (FKM)
Contamination efficiency	Class 18 / 16 / 13
Filtration	Required filtration grade ß 6…10 ≥ 75, see data sheet 1.0-50

PERFORMANCE SPECIFICATIONS

Oil viscosity υ = 30 mm²/s

Q = f (I) — Volume flow signal characteristics QN

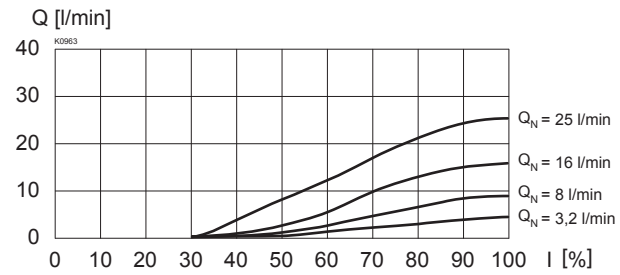

Q = f (I) — Volume flow signal characteristics QO

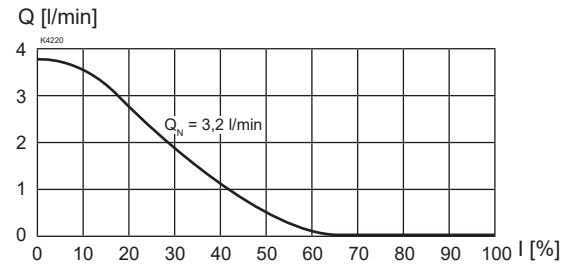

Q = f (p) — Volume flow pressure characteristics QN + QO
QN: I = I_G / QO: I = 0 mA

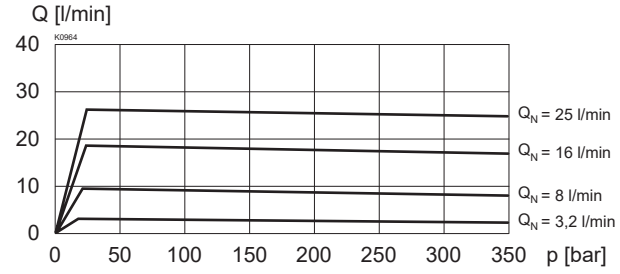

Q_L = f (p) — Leakage volume flow characteristics QN + QO

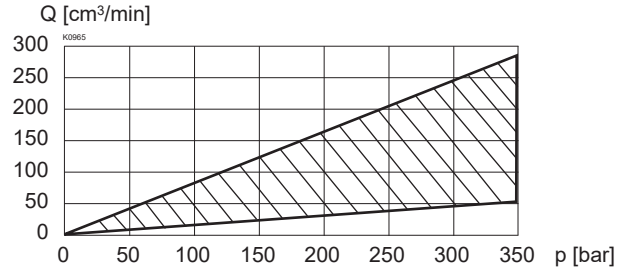

DIMENSIONS

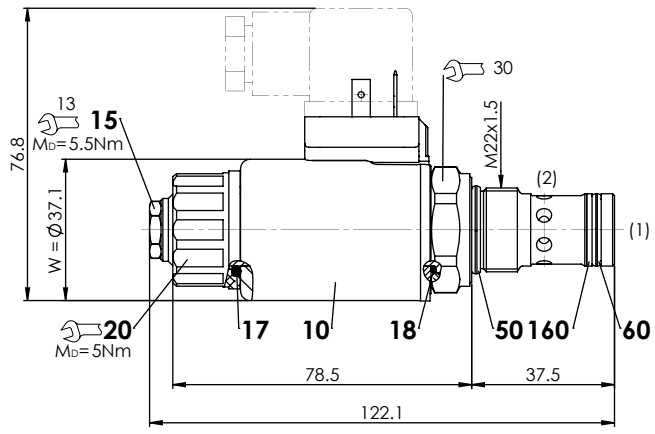

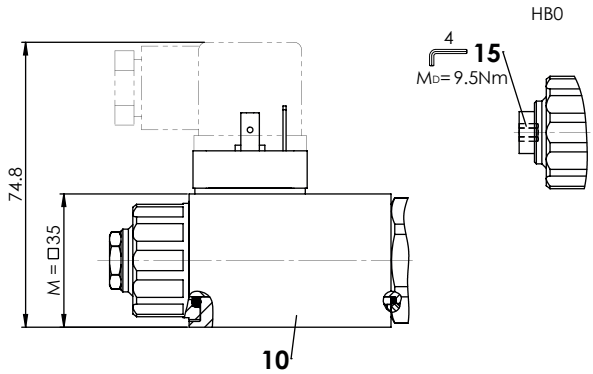

HYDRAULIC CONNECTION

Cavity drawing according to ISO 7789–22–01–0–98

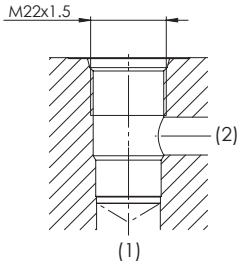

Note! For detailed cavity drawing and cavity tools see data sheet 2.13-1008

PARTS LIST

Position	Article	Description
10	206.2…	W.S37 / 19 x 50
	260.5…	M.S35 / 19 x 50
15	253.8000	HB4,5 manual override
	239.2033	HB0 Screw plug
20	154.2700	Knurled nut
	251.3222	Seal kit QNPPM22
	108576	Seal kit QNPPM22-D1
		Seal kit consisting of:
17		O-ring ID 18,72 x 2,62
18		O-ring ID 17,17 x 1,78
50		O-ring ID 18,77 x 1,78
60		O-ring ID 15,60 x 1,78
160		Backup ring rd 16,1 x 19 x 1,4 slitted

ACCESSORIES

Proportional amplifier	Register 1.13
Mating connector black (B)	Article no. 219.2002
Flange body / sandwich plate NG4-Mini	Data sheet 2.6-820
Flange body / sandwich plate NG6	Data sheet 2.6-840
Threaded body	Data sheet 2.9-205
Technical explanations	Data sheet 1.0-100
Filtration	Data sheet 1.0-50

MANUAL OVERRIDE

HB4,5
Optionally: Screw plug (HB0), no actuation possible

SURFACE TREATMENT

- The cartridge body is gas-nitro-carburised
- The armature tube and the slip-on coil are zinc- / nickel-coated

SEALING MATERIAL

NBR or FKM (Viton) as standard, choice in the type code

INSTALLATION NOTES

Mounting type	Screw-in cartridge M22 x 1,5
Mounting position	Any, preferably horizontal
Tightening torque	M_D = 60 Nm Screw-in cartridge M_D = 5 Nm knurled nut M_D = 9,5 Nm HB0 M_D = 5,5 Nm HB4,5

STANDARDS / TECHNICAL INFORMATION

Cartridge cavity	ISO 7789
Solenoids	DIN VDE 0580
Connection execution D	DIN EN 175301 – 803
Protection class	EN 60 529
Contamination efficiency	ISO 4406